PRESSURE VESSELS AND ACCESSORIES

Laquaforce
WATER TREATMENT TECHNOLOGY

WAVE CYBER RESIDENTIAL PRESSURE VESSELS WITH BASE

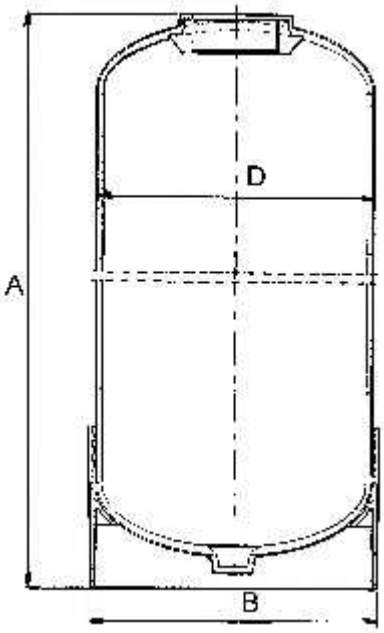

- **composite pressure vessels PE liner reinforced with fiberglass and epoxy resin;**
- **for industrial and potable water treatment systems;**
- **European 97/23/EC Directive compliant for pressure equipment (PED);**
- **TUV certification for contact with drinking water following EC directives and KTW recommendations;**
- **D.M. n.174 dated 06/04/2004 compliant about materials suitable for contact with water for human consumption;**
- **max operating pressure 10 bar;**
- **max operating temperature 50°C;**
- **top connection threaded 2 ½" – 8NPSM or 4"– 8UN;**
- **cycle test 250.000 times from 0,7 to 10 bar;**
- **burst test to 4 times max operating pressure;**
- **blue colour;**

REF.	MODEL	VOLUME (liters)	DIAMETER (mm)	A (mm)	B (mm)	CONNECTION (inch)
PV029	6 x 13	4,3	155	332 ± 4	164	2 ½"
PV028	6 x 18	6,7	155	459 ± 4	164	2 ½"
PV026	6 x 35	13,7	155	891 ± 4	164	2 ½"
PV027	7 x 13	5,8	182	334 ± 4	189	2 ½"
PV030	7 x 17	8,3	182	430 ± 4	189	2 ½"
PV025	7 x 24	12,6	182	612 ± 4	189	2 ½"
PV031	7 x 30	16,2	182	764 ± 4	189	2 ½"
PV032	7 x 35	19,1	182	898 ± 4	189	2 ½"
PV033	7 x 44	24,3	182	1129 ± 5	189	2 ½"
PV034	8 x 13	7,7	207	335 ± 4	214	2 ½"
PV035	8 x 17	11,0	207	432 ± 4	214	2 ½"
PV039	8 x 24	16,6	207	612 ± 4	214	2 ½"
PV036	8 x 30	21,4	207	762 ± 4	214	2 ½"
PV037	8 x 35	24,8	207	898 ± 4	214	2 ½"
PV038	8 x 44	32,1	207	1126 ± 5	214	2 ½"
PV041	9 x 17	13,7	233	431 ± 4	240	2 ½"
PV040	9 x 30	26,6	233	766 ± 5	240	2 ½"
PV042	9 x 35	31,6	233	896 ± 4	240	2 ½"
PV043	9 x 42	38,2	233	1074 ± 5	240	2 ½"
PV044	9 x 48	44,6	233	1228 ± 5	240	2 ½"
PV047	10 x 17	16,8	258	436 ± 4	264	2 ½"
PV045	10 x 19	19,2	258	487 ± 4	264	2 ½"
PV052	10 x 22	22,9	258	559 ± 4	264	2 ½"
PV055	10 x 24	25,1	258	605 ± 4	264	2 ½"
PV046	10 x 30	32,4	258	766 ± 4	264	2 ½"
PV048	10 x 35	38,4	258	897 ± 4	264	2 ½"
PV049	10 x 44	50	258	1126 ± 5	264	2 ½"
PV059	10 x 47	54	258	1188 ± 5	264	2 ½"
PV050	10 x 54	62	258	1386 ± 5	264	2 ½"
PV051	10 x 54	62	258	1382 ± 5	264	4"
PV053	12 x 48	79,5	310	1232 ± 6	310	2 ½"
PV054	12 x 52	87	310	1338 ± 6	310	2 ½"
PV056	13 x 44	85	336	1145 ± 6	338	2 ½"
PV057	13 x 54	106	336	1398 ± 6	338	2 ½"
PV058	13 x 54	106	336	1393 ± 6	338	4"

WAVE CYBER RESIDENTIAL PRESSURE VESSELS WITHOUT BASE

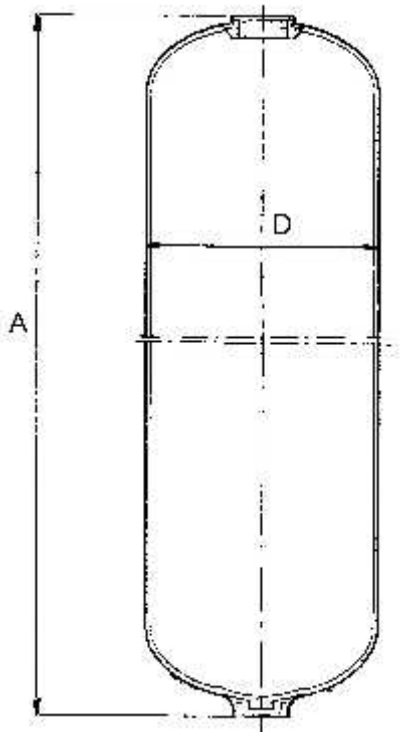

- **composite pressure vessels PE liner reinforced with fiberglass and epoxy resin;**
- **for industrial and potable water treatment systems;**
- **European 97/23/EC Directive compliant for pressure equipment (PED);**
- **TUV certification for contact with drinking water following EC directives and KTW recommendations;**
- **D.M. n.174 dated 06/04/2004 compliant about materials suitable for contact with water for human consumption;**
- **max operating pressure 10 bar;**
- **max operating temperature 50°C;**
- **top connection threaded 2 ½" – 8NPSM or 4"–8UN;**
- **cycle test 250.000 times from 0,7 to 10 bar;**
- **burst test to 4 times max operating pressure;**
- **blue colour;**

REF.	MODEL	VOLUME (liters)	DIAMETER (mm)	A (mm)	CONNECTION (inch)
PV005	6 x 13	4,3	156	329 ± 3	2 ½"
PV006	7 x 13	5,8	182	329 ± 3	2 ½"
PV007	7 x 17	8,3	182	431 ± 3	2 ½"
PV008	7 x 19	9,6	182	483 ± 3	2 ½"
PV016	7 x 24	12,6	182	611 ± 3	2 ½"
PV010	7 x 30	16,2	182	771 ± 3	2 ½"
PV009	7 x 35	19,1	182	891 ± 3	2 ½"
PV011	8 x 13	7,7	206	329 ± 3	2 ½"
PV012	8 x 17	11,0	206	431 ± 3	2 ½"
PV015	8 x 24	16,6	206	611 ± 3	2 ½"
PV013	8 x 30	21,4	206	771 ± 3	2 ½"
PV014	8 x 35	24,8	206	891 ± 3	2 ½"
PV017	9 x 17	13,7	232	431 ± 3	2 ½"
PV018	9 x 30	26,6	232	771 ± 3	2 ½"
PV019	9 x 35	31,6	232	891 ± 3	2 ½"
PV022	10 x 17	16,8	257	431 ± 3	2 ½"
PV023	10 x 19	19,2	257	483 ± 3	2 ½"
PV020	10 x 24	25,1	257	611 ± 3	2 ½"
PV021	10 x 30	32,4	257	771 ± 3	2 ½"
PV024	10 x 35	38,4	257	891 ± 3	2 ½"

DOME-HOLE WAVE CYBER RESIDENTIAL PRESSURE VESSELS

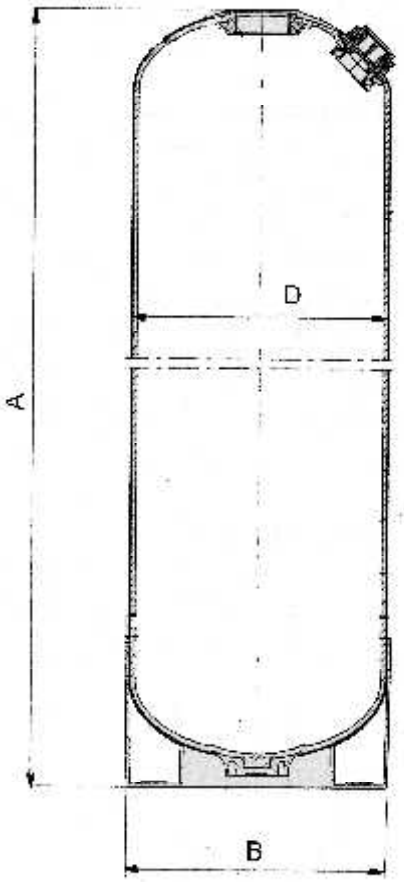

- **composite pressure vessels PE liner reinforced with fiberglass and epoxy resin;**
- **1 ¼" opening on the dome top of the tank with Noryl plug;**
- **for industrial and potable water treatment systems;**
- **European 97/23/EC Directive compliant for pressure equipment (PED);**
- **TUV certification for contact with drinking water following EC directives and KTW recommendations;**
- **max operating pressure 10 bar;**
- **max operating temperature 50°C;**
- **top connection threaded 2 ½" – 8NPSM or top connection threaded 2 ½" – 8NPSM and bottom connection threaded 4"– 8UN (see the table below);**
- **cycle test 250.000 times from 0,7 to 10 bar;**
- **burst test to 4 times max operating pressure;**
- **blue colour;**
- **warranty 5 years.**

REF.	MODEL	VOLUME (liters)	DIAMETER (mm)	A (mm)	B (mm)	CONNECTION (inch)
PV048DH	10 x 35 DH	40	260	907 ± 5	264	2 ½"
PV049DH	10 x 44 DH	50	260	1132 ± 5	264	2 ½"
PV059DH	10 x 47 DH	54	260	1205 ± 5	264	2 ½"
PV050DH	10 x 54 DH	62	260	1391 ± 5	264	2 ½"
PV053DH	12 x 48 DH	80	310	1238 ± 6	310	2 ½"
PV054DH	12 x 52 DH	87	310	1344 ± 6	310	2 ½"
PV056DH	13 x 44 DH	85	336	1145 ± 6	338	2 ½"
PV057DH	13 x 54 DH	106	336	1400 ± 6	338	2 ½"
PV190DH	14 x 65 DH	148	365	1680 ± 6	365	2 ½"
PV214DH	16 x 65 DH	194	415	1867 ± 4	400	2 ½" – 4"

Laquaforce
WATER TREATMENT TECHNOLOGY

WAVE CYBER INDUSTRIAL PRESSURE VESSELS WITH THREADED TOP OPENING

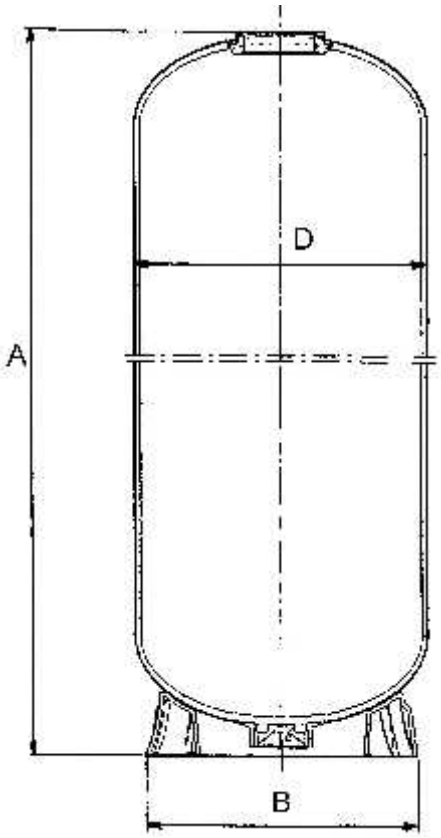

- **composite pressure vessels PE liner reinforced with fiberglass and epoxy resin;**
- **for industrial and potable water treatment systems;**
- **European 97/23/EC Directive compliant for pressure equipment (PED);**
- **TUV certification for contact with drinking water following EC directives and KTW recommendations;**
- **D.M. n.174 dated 06/04/2004 compliant about materials suitable for contact with water for human consumption;**
- **max operating pressure 10 bar;**
- **max operating temperature 50°C;**
- **threaded top connection 2 ½" – 8NPSM or 4"– 8UN;**
- **cycle test 250.000 times from 0,7 to 10 bar;**
- **burst test to 4 times max operating pressure;**
- **blue colour;**
- **warranty 5 years.**

REF.	MODEL	VOLUME (liters)	DIAMETER (mm)	A (mm)	B (mm)	CONNECTION (inch)
PV186	14 x 52	115	363	1344 ± 6	365	2 ½"
PV187	14 x 52	115	363	1340 ± 6	365	4"
PV190	14 x 65	148	363	1674 ± 6	365	2 ½"
PV191	14 x 65	148	363	1674 ± 6	365	4"
PV202	16 x 28	76	413	735 ± 4	416	4"
PV188	16 x 52	153	413	1341 ± 6	416	2 ½"
PV189	16 x 52	153	413	1341 ± 6	416	4"
PV192	16 x 65	194	413	1671 ± 6	416	2 ½"
PV193	16 x 65	194	413	1671 ± 6	416	4"
PV203	18 x 36	138	491	1000 ± 15	454	4"
PV194	18 x 53	211	491	1432 ± 15	454	4"
PV195	18 x 65	269	491	1722 ± 15	454	4"
PV204	21 x 36	164	555	1002 ± 15	516	4"
PV196	21 x 53	277	555	1434 ± 15	516	4"
PV197	21 x 62	344	555	1721 ± 15	516	4"
PV198	24 x 65	425	635	1717 ± 15	594	4"
PV199	24 x 72	473	635	1918 ± 15	594	4"
PV200	30 x 72	708	780	1836 ± 15	786	4"
PV201	36 x 72	984	938	1856 ± 15	936	4"

WAVE CYBER INDUSTRIAL PRESSURE VESSELS WITH TOP&BOTTOM THREADED OPENINGS

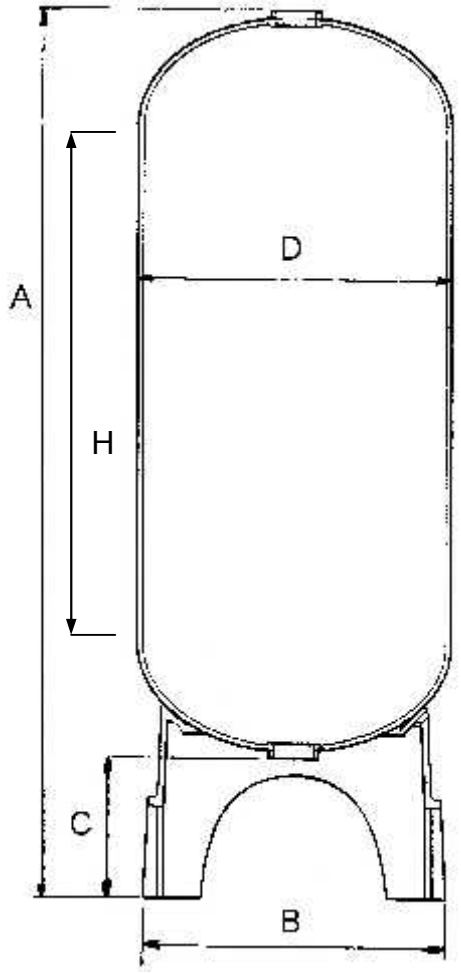

- **composite pressure vessels PE liner reinforced with fiberglass and epoxy resin;**
- **for industrial and potable water treatment systems;**
- **European 97/23/EC Directive compliant for pressure equipment (PED);**
- **TUV certification for contact with drinking water following EC directives and KTW recommendations;**
- **D.M. n.174 dated 06/04/2004 compliant about materials suitable for contact with water for human consumption;**
- **max operating pressure 10 bar;**
- **max operating temperature 50°C;**
- **top and bottom threaded connection 4”– 8UN;**
- **cycle test 250.000 times from 0,7 to 10 bar;**
- **burst test to 4 times max operating pressure;**
- **blue colour;**
- **warranty 5 years.**

REF.	MODEL	VOLUME (liters)	DIAMETER (mm)	A (mm)	B (mm)	C (mm)	H (mm)	CONNECTION (inch)
PV213	14 x 65	148	363	1858 ± 6	360	225	1370	4”
PV214	16 x 65	194	413	1861 ± 6	400	225	1380	4”
PV215	18 x 65	275	491	2027 ± 15	488	346	1360	4”
PV217	21 x 62	330	555	2064 ± 15	550	394	1260	4”
PV219	24 x 72	473	625	2168 ± 15	618	299	1420	4”
PV220	30 x 72	697	780	2139 ± 15	770	335	1310	4”
PV221	36 x 72	1011	938	2147 ± 15	932	342	1280	4”

WAVE CYBER INDUSTRIAL PRESSURE VESSELS WITH FLANGED TOP OPENING

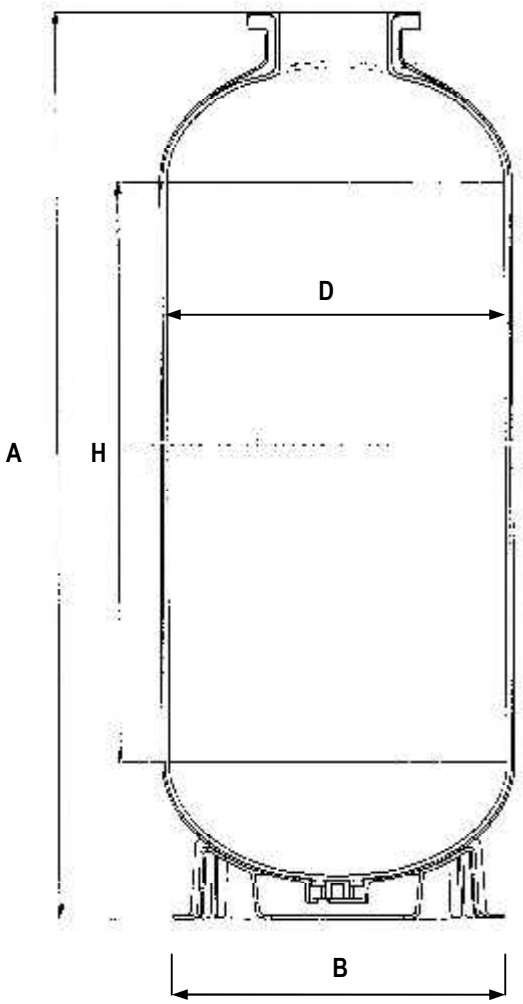

- **composite pressure vessels PE liner reinforced with fiberglass and epoxy resin;**
- **for industrial and potable water treatment systems;**
- **European 97/23/EC Directive compliant for pressure equipment (PED);**
- **TUV certification for contact with drinking water following EC directives and KTW recommendations;**
- **D.M. n.174 dated 06/04/2004 compliant about materials suitable for contact with water for human consumption;**
- **max operating pressure 10 bar;**
- **max operating temperature 65°C;**
- **6” top connection;**
- **cycle test 250.000 times from 0,7 to 10 bar;**
- **burst test to 4 times max operating pressure;**
- **blue colour;**
- **warranty 5 years.**

FLANGED TOP OPENING DETAIL

Dimensions in mm [inch]

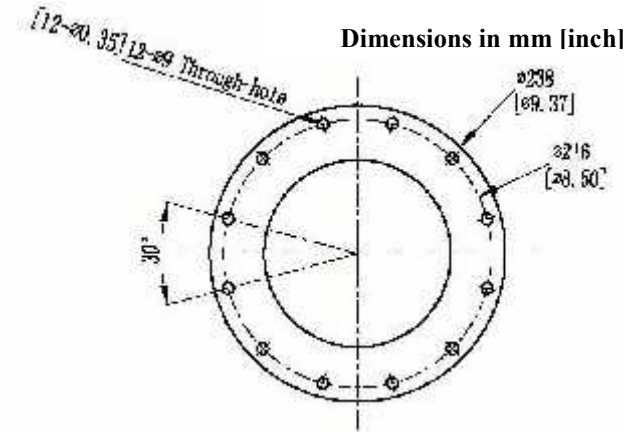

REF.	MODEL	VOLUME (liters)	DIAMETER (mm)	A (mm)	B (mm)	H (mm)	CONNECTION (inch)
PV240	18 x 65	261	485	1776 ± 15	454	1320	6”
PV243	21 x 62	330	549	1780 ± 15	516	1290	6”
PV246	24 x 72	491	625	1973 ± 15	594	1480	6”
PV249	30 x 72	704	779	1892 ± 15	786	1325	6”
PV252	36 x 72	998	931	1916 ± 15	936	1280	6”

Laquaforce
WATER TREATMENT TECHNOLOGY

WAVE CYBER INDUSTRIAL PRESSURE VESSELS WITH FLANGED TOP&BOTTOM OPENINGS

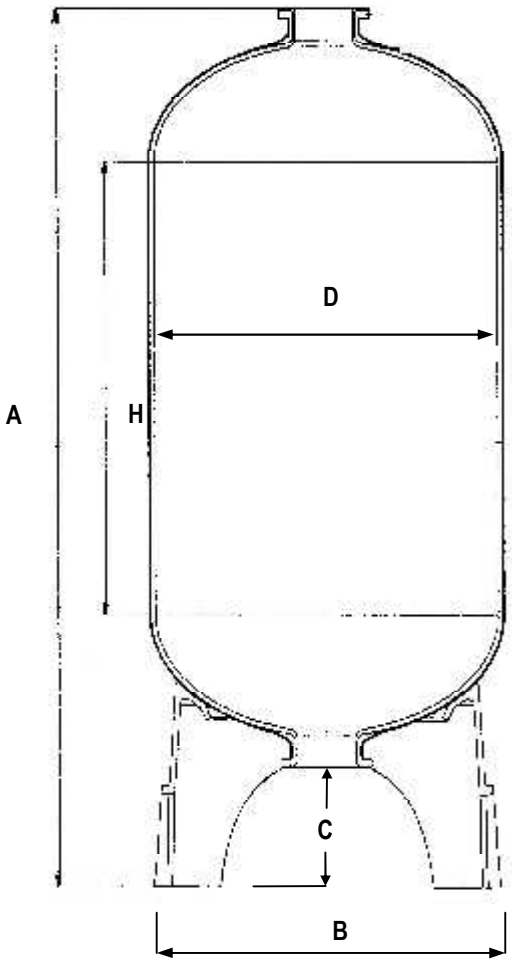

- **composite pressure vessels PE liner reinforced with fiberglass and epoxy resin;**
- **for industrial and potable water treatment systems;**
- **European 97/23/EC Directive compliant for pressure equipment (PED);**
- **TUV certification for contact with drinking water following EC directives and KTW recommendations;**
- **D.M. n.174 dated 06/04/2004 compliant about materials suitable for contact with water for human consumption;**
- **max operating pressure 10 bar;**
- **max operating temperature 65°C;**
- **top and bottom 6” flange connection;**
- **cycle test 250.000 times from 0,7 to 10 bar;**
- **burst test to 4 times max operating pressure;**
- **blue colour;**
- **warranty 5 years.**

FLANGED TOP&BOTTOM OPENINGS DETAIL

Dimensions in mm [inch]

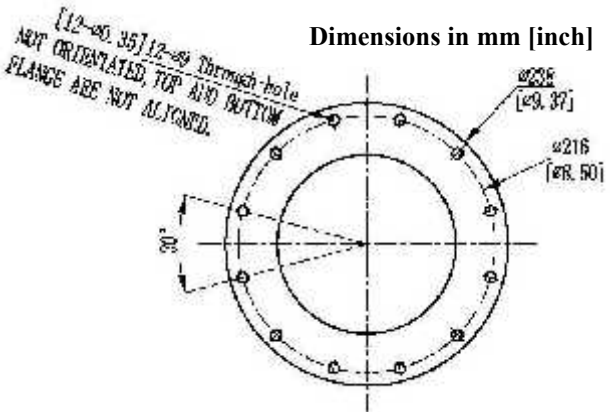

REF.	MODEL	VOLUME (liters)	DIAMETER (mm)	A (mm)	B (mm)	C (mm)	H (mm)	CONNECTION (inch)
PV260	18 x 65	261	485	2079 ± 15	488	290	1320	6”
PV263	21 x 62	330	549	2128 ± 15	550	335	1290	6”
PV266	24 x 72	491	625	2222 ± 15	618	240	1480	6”
PV269	30 x 72	704	780	2199 ± 15	770	276	1325	6”
PV272	36 x 72	998	931	2213 ± 15	932	281	1280	6”
PV275	42 x 63	1274	1089	2142 ± 15	1038	288	1191	6”
PV276	42 x 72	1494	1089	2396 ± 15	1038	288	1445	6”
PV279	48 x 72	1895	1233	2399 ± 15	1172	295	1400	6”
PV273	63 x 67	2451	1633	2044 ± 15	1560	285	728	6”
PV274	63 x 86	3306	1633	2475 ± 15	1560	285	1158	6”

<u>ATTENTION:</u> for 63” pressure vessels, when you use a DN100 lower system, you have to raise the pressure vessel.

LAQUAFORCE
WATER TREATMENT TECHNOLOGY

WRAP AROUND TANK JACKETS

- **kit wrap around tank jacket including:**
  - jacket in flexible plastic material with double backed adhesive tape;
  - plastic black cap providing finishing touch;
- **colours available:**
  - white
  - silver with protection film.

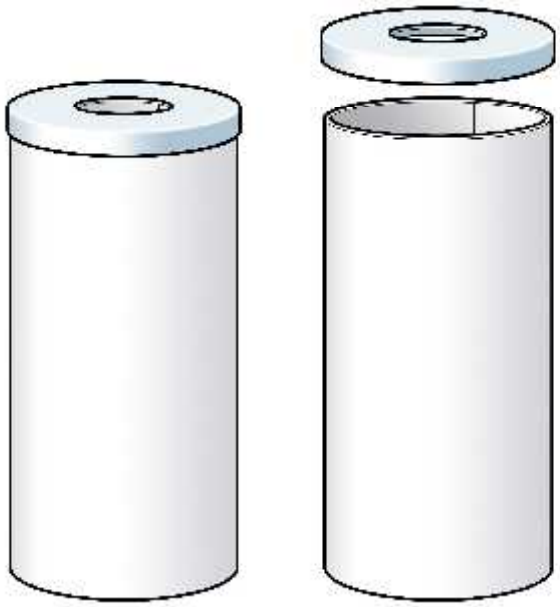

REF.	COLOUR	FOR TANK
RI 101	White	7 x 35
RI 102	White	8 x 35
RI 103	White	9 x 35
RI 104	White	10 x 35
RI 105	White	10 x 54
RI 201	Silver	7 x 35
RI 202	Silver	8 x 35
RI 203	Silver	9 x 35
RI 204	Silver	10 x 35
RI 205	Silver	10 x 54

Laquaforce
WATER TREATMENT TECHNOLOGY

ADAPTERS

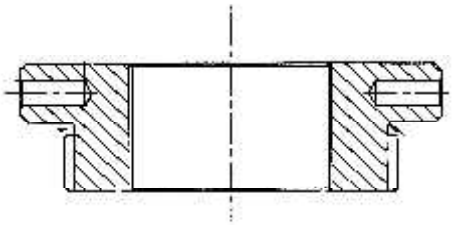

- **adapter 4”– 8UN to 2 ½” – 8NPSM;**
- **with O-ring.**

REF.	MODEL	REDUCTION TO
PV300	PVC machined	2 ½” – 8 NPSM
PV306	PC molded	2 ½” – 8 NPSM
PV307	PVC machined	2” BSP

CLOSURES

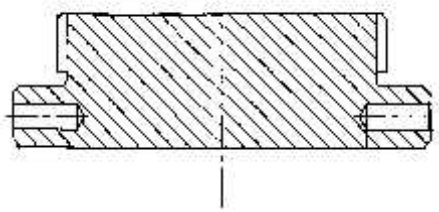

- **closure for 4”– 8UN tanks thread;**
- **with O-ring.**

REF.	MODEL
PV301	PVC machined
PV338	PC molded

6” CLOSED FLANGE

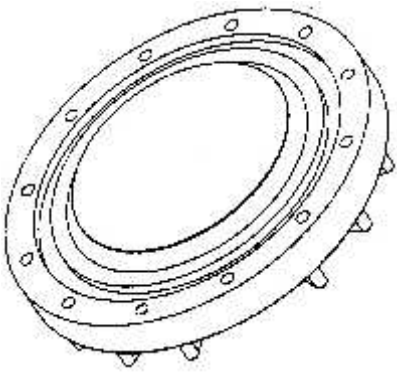

- **6” closed flange complete with bolts, nuts, washer and O-ring;**
- **flange material PPO;**
- **bolts material AISI 304.**

REF.	PV510

6” - 4” ADAPTER

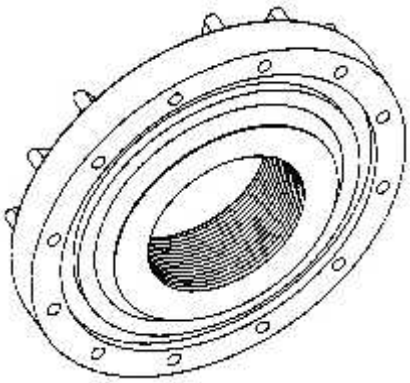

- **6” flanged adapter 4”-8UN, complete with bolts, nuts , washer and O-ring;**
- **flange material PPO;**
- **bolts material AISI 304.**

REF.	PV511

6” - 3” - 3” ADAPTER

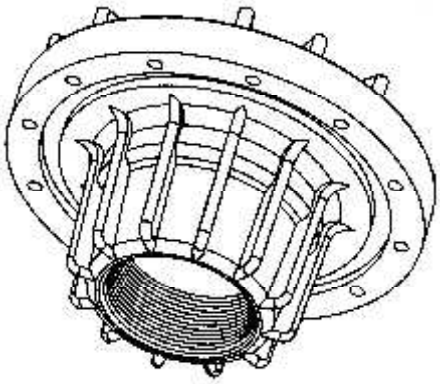

- **6” flanged x 3” x 3” BSP threaded adapter complete with bolts, nuts, washer and O-ring.;**
- **flange material PPO;**
- **bolts material AISI 304.**

REF.	PV509

AERATION VALVE & VACUUM BREAKER

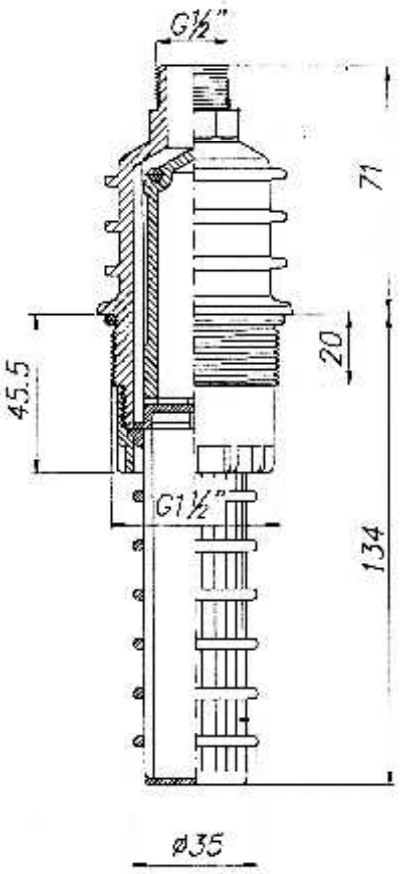

- **aeration valve and vacuum breaker in PP;**
- **connection 1 ½", drain ½";**
- **max pressure 10 bar;**
- **max temperature 65°C.**

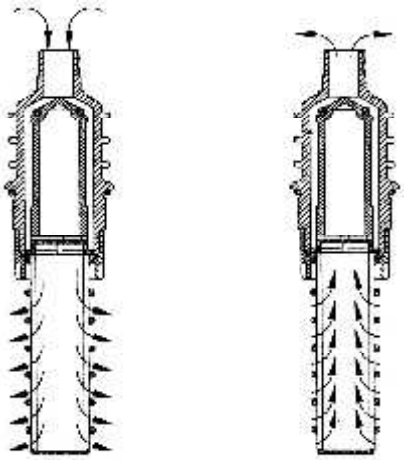

REF.	PV308

CYLINDRICAL DIFFUSORS

A

B

C

D

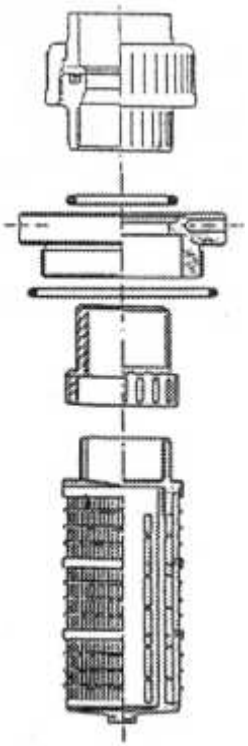

- **cylindrical diffusor for vessels with 4”- 8UN, for upper or lower installation;**
- **outlet connection to glue D.63;**
- **0,2 mm slots or 0,5 mm;**
- **materials: adapter PVC, diffusor PP;**
- **flow 20 m^3/h at Δp 0,2 bar;**
- **including:**
  A. union D63 (REF. PV329);
  B. adapter 4” with O-rings (REF. PV332);
  C. reduction 2” M/F (REF. PV335);
  D. diffusor diameter 85 mm length 180 mm. (REF. PV340 0,2 mm slots – REF. PV342 0,5 mm slots).

REF.	SLOTS (mm)	VESSEL
PV351	0,2	14” ÷ 36”
PV352	0,5	14” ÷ 36”

CYLINDRICAL DIFFUSORS WITH ELBOW

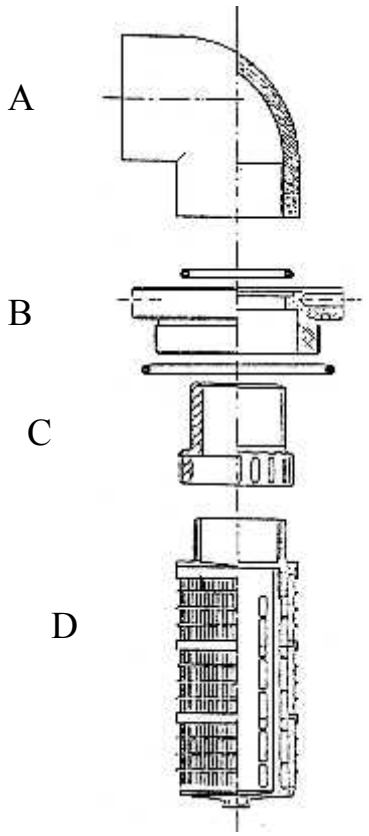

- **cylindrical diffusor for vessel 4”-8UN, for upper installation;**
- **outlet connection with elbow to glue D63;**
- **0,2 mm slots or 0,5 mm**
- **materials: adapter and elbow PVC, diffusor PP;**
- **flow 20 m^3/h at Δp 0,2 bar;**
- **including:**
  - **A. elbow D63 (REF. PV331);**
  - **B. adapter 4”with O-rings (REF. PV332);**
  - **C. reduction 2” M/F (REF. PV335);**
  - **D. diffusor con diameter 85 mm length 180 mm (REF.PV340 0,2 mm slots – REF. PV342 0,5 mm slots).**

REF.	SLOTS (mm)	VESSEL
PV350	0,2	14” ÷ 36”
PV349	0,5	14” ÷ 36”

FLANGED UPPER DIFFUSORS

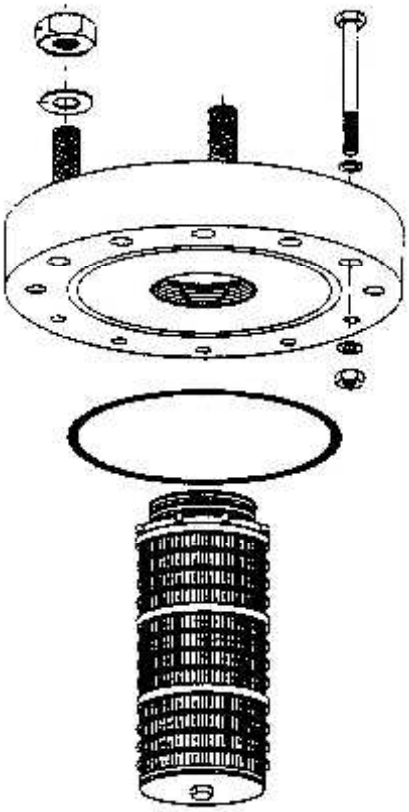

- **upper diffusor 6” flanged, complete with bolts, nuts, washer and O-ring;**
- **flange material PVC;**
- **PP cylindrical diffusor 0,2 mm slots or 0,5 mm slots – see data sheet 02-03-08-EN;**
- **bolts material AISI 304.**

REF.	VESSEL	OUTLET	CYLINDRICAL DIFFUSOR DIAMETER (mm)	CYLINDRICAL DIFFUSOR LENGTH (mm)	SLOTS (mm)	FLOW (m^3/h) Δp 0,2 bar
PV512	18” ÷ 36”	DN65	85	284	0,2	20
PV514	24” ÷ 36”	DN80	120	240	0,2	30
PV515	42” ÷ 48”	DN80	120	312	0,2	36
PV553	63”	DN80	120	384	0,2	50
PV518	63”	DN100	120	384	0,2	60
PV513	18” ÷ 36”	DN65	85	284	0,5	20
PV516	24” ÷ 36”	DN80	120	240	0,5	30
PV517	42” ÷ 48”	DN80	120	312	0,5	36
PV554	63”	DN80	120	384	0,5	50
PV519	63”	DN100	120	384	0,5	60

CYLINDRICAL DIFFUSORS

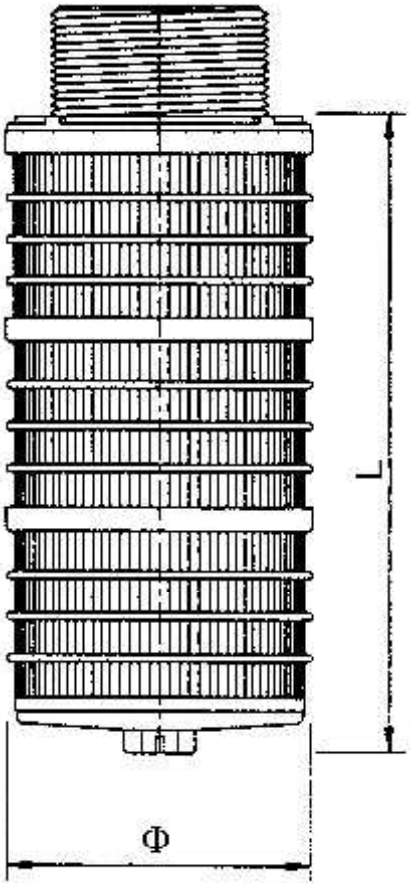

- **PP cylindrical diffusor with thread connection 2”,3” or 4”;**
- **slots 0,2 or 0,5 mm.**

REF.	CONNECTION	DIAMETER (mm)	LENGTH (mm)	SLOTS (mm)
PV340	2”	85	180	0,2
PV339	2”	85	284	0,2
PV341	2”	85	338	0,2
PV342	2”	85	180	0,5
PV343	2”	85	284	0,5
PV344	2”	85	338	0,5
PV364	3”	120	240	0,2
PV365	3”	120	312	0,2
PV366	3”	120	384	0,2
PV367	3”	120	240	0,5
PV368	3”	120	312	0,5
PV369	3”	120	384	0,5
PV393	4”	120	384	0,2
PV394	4”	120	384	0,5

LOWER LATERAL SYSTEMS

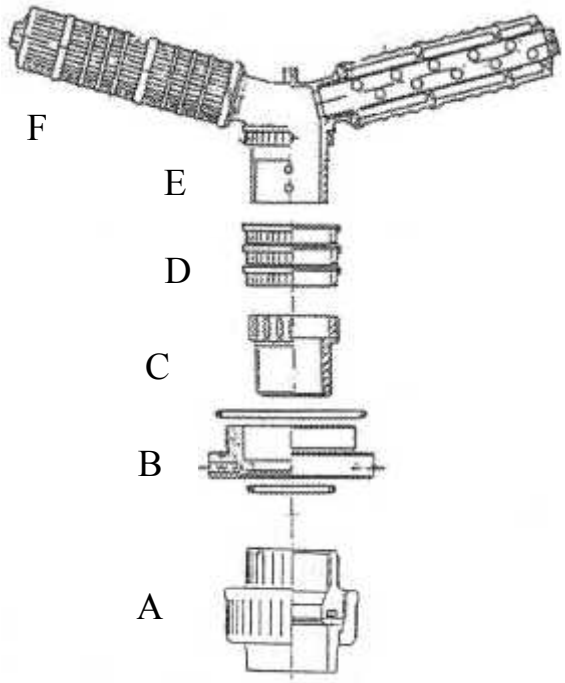

- **lower lateral system for vessels with 4” – 8UN opening;**
- **outlet connection to glue D63;**
- **slots 0,2 or 0,5 mm;**
- **materials: adapter PVC, hub and laterals PP;**
- **including:**
  - **A. union D63 (REF. PV329);**
  - **B. adapter 4” with O-rings (REF. PV332);**
  - **C. reduction 2” M/F (REF. PV335);**
  - **D. n.3 spacers (REF. PV337);**
  - **E. hub (REF. PV336);**
  - **F. n.5 laterals diameter 54 mm, length = see table.**

REF.	VESSEL	LATERALS LENGHT (mm)	SLOTS (mm)	FLOW (m^3/h) Δp 0,2 bar
PV353	14” - 16” - 18”	113	0,2	16
PV354	21” - 24”	175	0,2	17
PV355	30”	237	0,2	18
PV356	36”	299	0,2	20
PV360	14” - 16” - 18”	113	0,5	16
PV361	21” - 24”	175	0,5	17
PV362	30”	237	0,5	18
PV363	36”	299	0,5	20

LOWER LATERAL SYSTEMS WITH 6 LATERALS HUB FOR FLANGED PRESSURE VESSELS

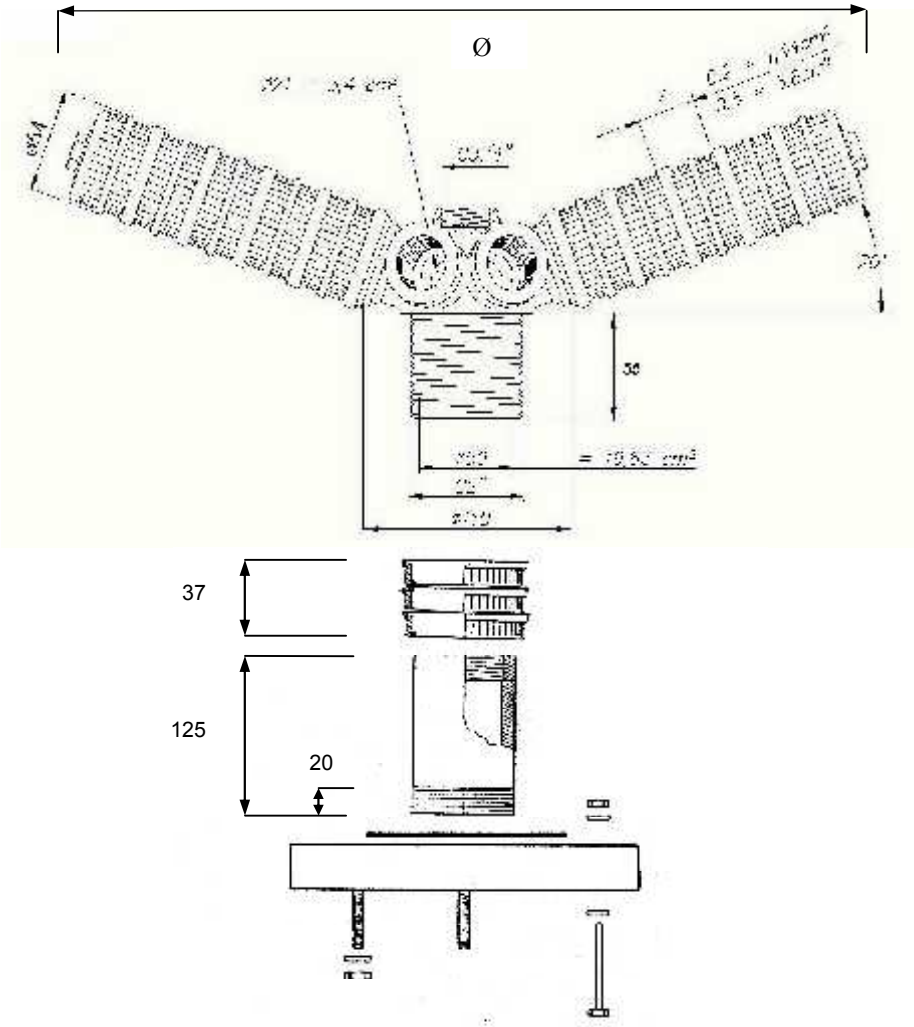

- **lower lateral system for 6” flanged pressure vessels;**
- **flange material PVC;**
- **complete with AISI 304 bolts and washer;**
- **hub at 6 laterals;**
- **laterals in PP, slots 0,2 or 0,5 mm, length as table below.**

REF.	VESSEL	CONNECTION	LATERALS LENGTH (mm)	DIAMETER Ø (mm)	SLOTS (mm)	FLOW (m^3/h) Δp 0,2 bar
PV520	18” - 21”	DN 65	144	374	0,2	16
PV521	24”	DN 65	175	432	0,2	17
PV522	30”	DN 65	237	549	0,2	18
PV523	36”	DN 65	299	665	0,2	20
PV524	18” - 21”	DN 65	144	374	0,5	16
PV525	24”	DN 65	175	432	0,5	17
PV526	30”	DN 65	237	549	0,5	18
PV527	36”	DN 65	299	665	0,5	20

LOWER LATERAL SYSTEMS WITH 8 LATERALS HUB FOR FLANGED PRESSURE VESSELS

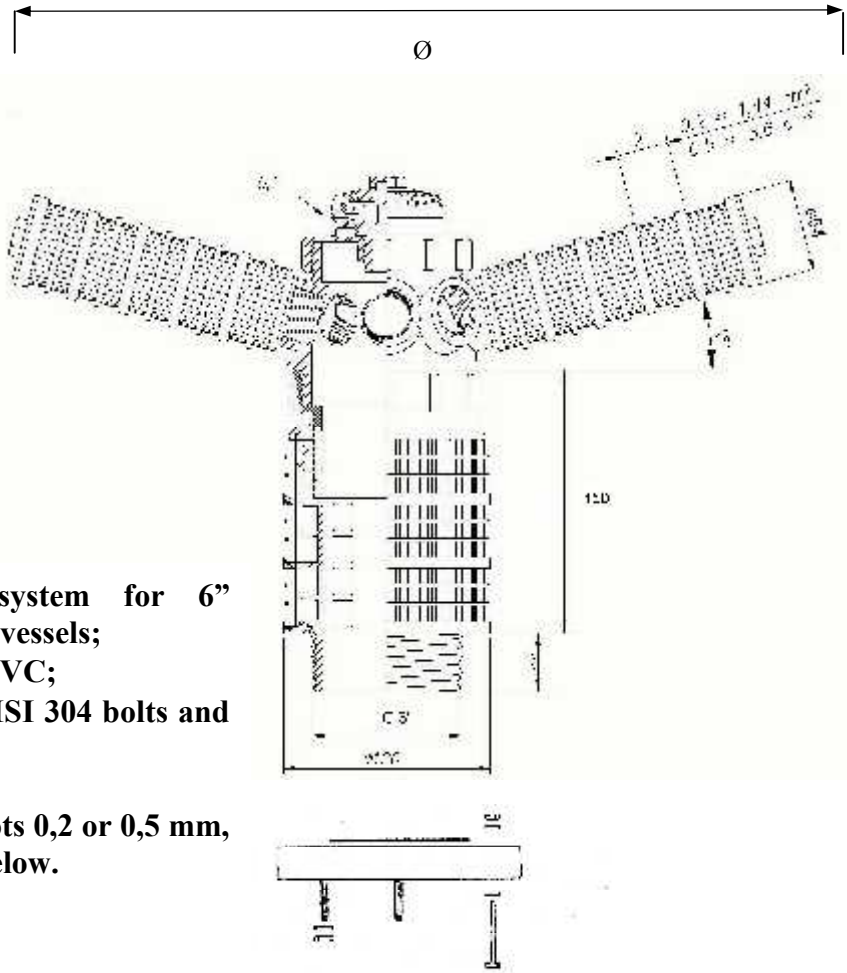

- **lower lateral system for 6” flanged pressure vessels;**
- **flange material PVC;**
- **complete with AISI 304 bolts and washer;**
- **hub at 8 laterals;**
- **laterals in PP, slots 0,2 or 0,5 mm, length as table below.**

REF.	VESSEL	CONNECTION	LATERALS LENGTH (mm)	DIAMETER Ø (mm)	SLOTS (mm)	FLOW (m^3/h) Δp 0,2 bar
PV522A	30”	DN 65	237	580	0,2	28
PV523A	36”	DN 65	299	699	0,2	30
PV528	24”	DN 80	175	461	0,2	26
PV529	30”	DN 80	237	580	0,2	28
PV530	36”	DN 80	299	699	0,2	30
PV526A	30”	DN 65	237	580	0,5	28
PV527A	36”	DN 65	299	699	0,5	30
PV531	24”	DN 80	175	461	0,5	26
PV532	30”	DN 80	237	580	0,5	28
PV533	36”	DN 80	299	699	0,5	30

LOWER DOUBLE LATERAL SYSTEMS
FOR FLANGED PRESSURE VESSELS

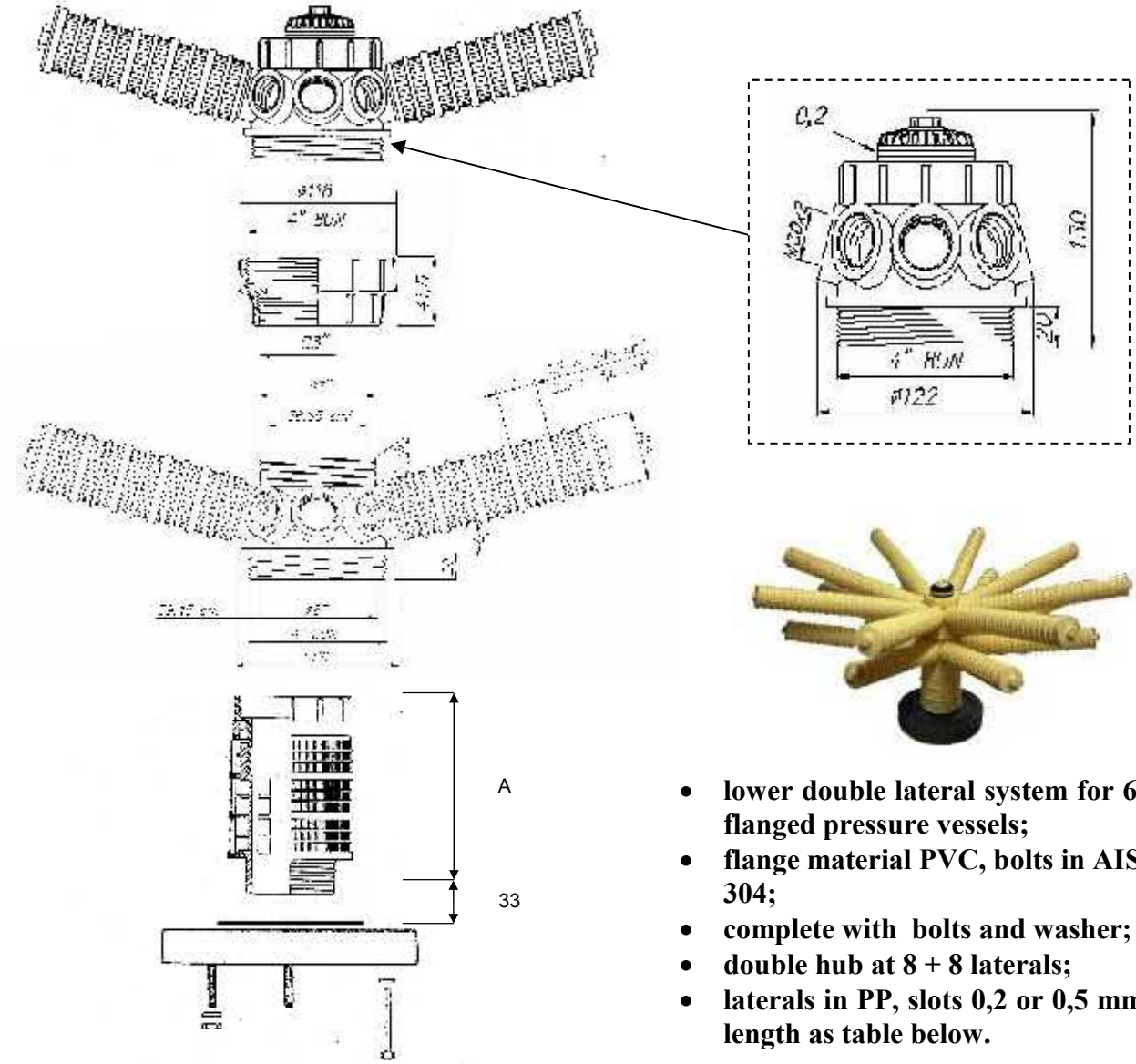

- **lower double lateral system for 6” flanged pressure vessels;**
- **flange material PVC, bolts in AISI 304;**
- **complete with bolts and washer;**
- **double hub at 8 + 8 laterals;**
- **laterals in PP, slots 0,2 or 0,5 mm, length as table below.**

REF.	VESSEL	CONNECTION	LATERALS QUANTITY	A (mm)	LATERALS LENGTH (mm)	SYSTEMS DIAMETERS (mm)	SLOTS (mm)	FLOW (m3/h) Δp 0,2 bar
PV534	42”	DN 80	8 + 8	150	361 423	819 939	0,2	32
PV535	48”	DN 80	8 + 8	150	423 485	939 1059	0,2	36
PV555	63”	DN 80	8 + 8	190	578 640	1239 1359	0,2	50
PV538	63”	DN 100	8 + 8	190	578 640	1239 1359	0,2	60
PV536	42”	DN 80	8 + 8	150	361 423	819 939	0,5	32
PV537	48”	DN 80	8 + 8	150	423 485	939 1059	0,5	36
PV556	63”	DN 80	8 + 8	190	578 640	1239 1359	0,5	50
PV539	63”	DN 100	8 + 8	190	578 640	1239 1359	0,5	60

TOP MOUNT LOWER LATERAL SYSTEMS FOR FLANGED PRESSURE VESSELS

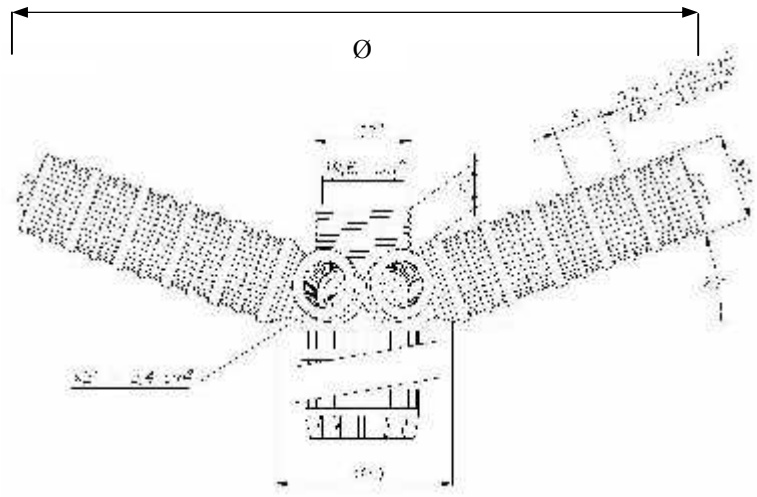

- **lower lateral system for 6” flanged pressure vessels for top mount valve, with 6 laterals;**
- **material hub and laterals PP, length as table below;**
- **slots 0,2 or 0,5 mm;**
- **to install with 2” adapter for the needed riser tube diameter.**

REF.	VESSEL	LATERALS LENGTH (mm)	DIAMETER Ø (mm)	SLOTS (mm)	FLOW (m^3/h) Δp 0,2 bar
PV540	18” - 21”	144	374	0,2	16
PV541	24”	175	432	0,2	17
PV542	30”	237	549	0,2	18
PV543	36”	299	665	0,2	20
PV544	18” - 21”	144	374	0,5	16
PV545	24”	175	432	0,5	17
PV546	30”	237	549	0,5	18
PV547	36”	299	665	0,5	20

2” GAS ADAPTERS

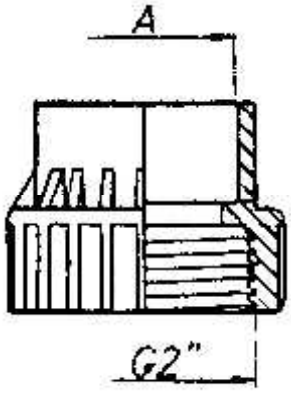

- **2” GAS adapters with connection to glue;**
- **material PVC.**

REF.	CONNECTION TO GLUE (mm)
PV384	41,8
PV385	48,3
PV386	50,0
PV387	63,0

TOP MOUNT LOWER LATERAL SYSTEMS FOR TUBES DIAMETER 90 MM

- **lower lateral system for 6” flanged pressure vessels for top mount valve, with 8 laterals;**
- **material hub and laterals PP, length as table below;**
- **slots 0,2;**
- **to glue on tube diameter 90 mm.**

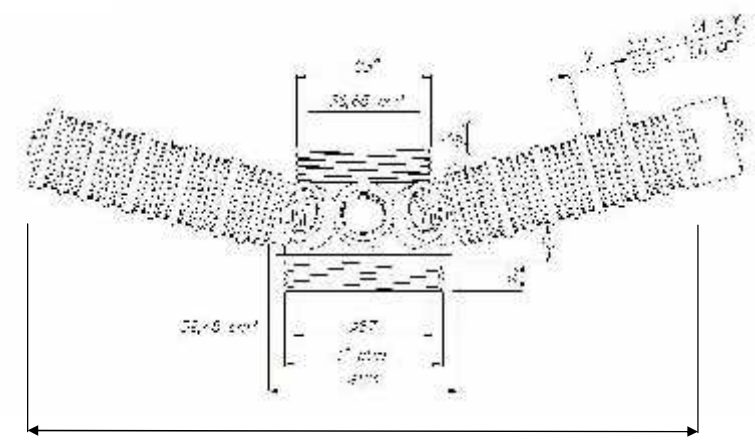

Ø

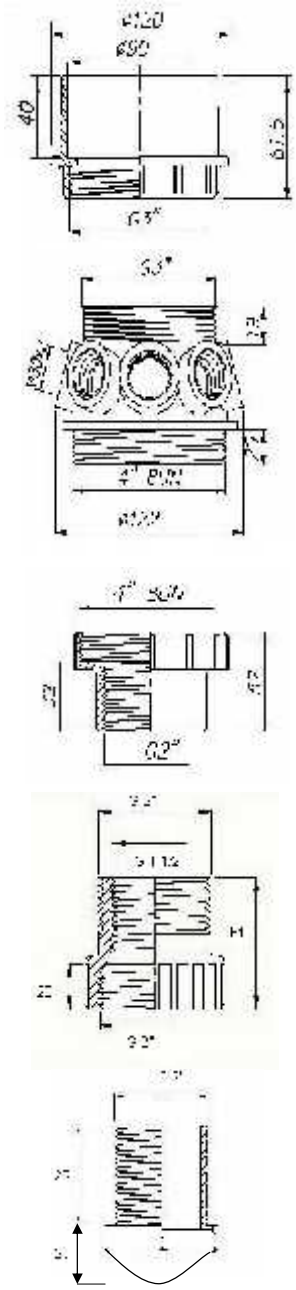

REF.	PRESSURE VESSEL	LATERALS LENGTH (mm)	DIAMETER Ø (mm)	SLOTS (mm)	FLOW (m^3/h) Δp 0,2 bar
PV548	30”	237	580	0,2	28
PV549	36”	299	699	0,2	30

T

SY

DI

LAQUAFORCE
WATER TREATMENT TECHNOLOGY

- **lower lateral system for 6” flanged pressure vessels for top mount valve, with 8+8 laterals;**
- **material hub and laterals PP, length as table below;**
- **slots 0,2;**
- **to glue on tube diameter 90 mm.**

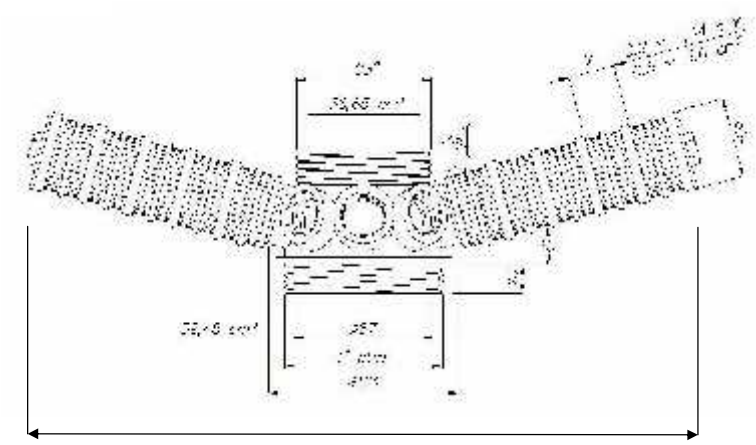

Ø

REF.	PRESSURE VESSEL	LATERALS QUANTITY	LATERALS LENGTH (mm)	DIAMETERS Ø (mm)	SLOTS (mm)	FLOW (m^3/h) Δp 0,2 bar
PV550	42”	8 + 8	299 423	699 939	0,2	31
PV551	48”	8 + 8	361 485	819 1059	0,2	34

CYLINDRICAL LATERALS

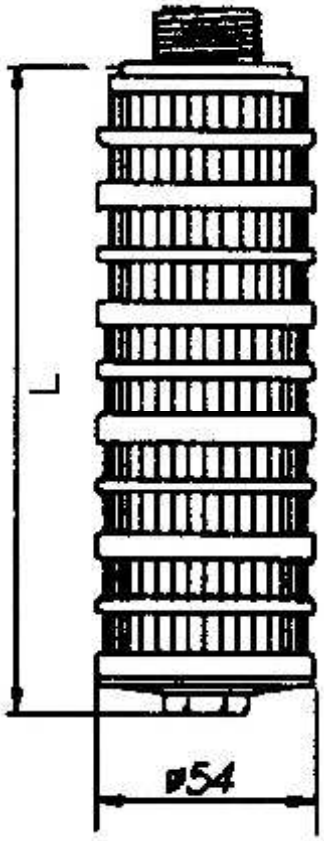

- **cylindrical laterals with threaded connection M 30x2;**
- **material PP;**
- **diameter 54 mm;**
- **slots 0,2 or 0,5 mm.**

LATERALS WITH 0,2 mm SLOTS

REF.	PV345	PV370	PV346	PV371	PV347	PV348	PV372	PV373	PV374	PV389	PV391
LENGTH (mm)	113	144	175	206	237	299	361	423	485	578	640

LATERALS WITH 0,5 mm SLOTS

REF.	PV375	PV376	PV377	PV378	PV379	PV380	PV381	PV382	PV383	PV390	PV392
LENGTH (mm)	113	144	175	206	237	299	361	423	485	578	640

FLANGE COUPLING KIT

- **for 6” flanged pressure vessels;**
- **including flange adaptor and coupling flange in PVC;**
- **with o-ring in EPDM.**

REF.	CONNECTION
PV594	DN65
PV595	DN80
PV596	DN100

LAQUAFORCE
WATER TREATMENT TECHNOLOGY

MINERAL TANK FUNNELS

REF.	PV295

REF.	PV395

- **The tank funnels are designed for filling mineral tanks with granular media and ion exchange resin;**
- **the funnels are designed to fit 2,5”, 4” and 6” mineral tank openings;**
- **these economical funnels are nestable to reduce shipping and storage costs;**
- **the funnel ref. PV395 snaps into a 4” or 6” mineral tank opening for stability when pouring media. The neck of the funnel has been carefully designed to allow trapped air inside the mineral tank to escape when media is poured in. This heavy duty part is blow molded out of high density polyethylene for exceptional strength and durability. The oval design provides an extra wide opening for ease of use when pouring. Handles are molded into the funnel for added convenience.**

REF.	DESCRIPTION
PV295	Funnel 2,5” openings
PV395	Funnel 4” and 6” openings